Four-Wire Bundle

Legal Information

About this Document

- This Document includes instructions for using and managing the Product. Pictures, charts, images and all other information hereinafter are for description and explanation only.
- The information contained in the Document is subject to change, without notice, due to firmware updates or other reasons. Please find the latest version of the Document at the Hikvision website (***https://www.hikvision.com***). Unless otherwise agreed, Hangzhou Hikvision Digital Technology Co., Ltd. or its affiliates (hereinafter referred to as "Hikvision") makes no warranties, express or implied.
- Please use the Document with the guidance and assistance of professionals trained in supporting the Product.

About this Product

- This product can only enjoy the after-sales service support in the country or region where the purchase is made.
- If the product you choose is a video product, please scan the following QR code to obtain the "Initiatives on the Use of Video Products", and read it carefully.

Acknowledgment of Intellectual Property Rights

- Hikvision owns the copyrights and/or patents related to the technology embodied in the Products described in this Document, which may include licenses obtained from third parties.
- Any part of the Document, including text, pictures, graphics, etc., belongs to Hikvision. No part of this Document may be excerpted, copied, translated, or modified in whole or in part by any means without written permission.
- HIKVISION and other Hikvision's trademarks and logos are the properties of Hikvision in various jurisdictions.
- Other trademarks and logos mentioned are the properties of their respective owners.

LEGAL DISCLAIMER

- TO THE MAXIMUM EXTENT PERMITTED BY APPLICABLE LAW, THIS DOCUMENT AND THE PRODUCT DESCRIBED, WITH ITS HARDWARE, SOFTWARE AND FIRMWARE, ARE PROVIDED "AS IS" AND "WITH ALL FAULTS AND ERRORS". HIKVISION MAKES NO WARRANTIES, EXPRESS OR

IMPLIED, INCLUDING WITHOUT LIMITATION, MERCHANTABILITY, SATISFACTORY QUALITY, OR FITNESS FOR A PARTICULAR PURPOSE. THE USE OF THE PRODUCT BY YOU IS AT YOUR OWN RISK. IN NO EVENT WILL HIKVISION BE LIABLE TO YOU FOR ANY SPECIAL, CONSEQUENTIAL, INCIDENTAL, OR INDIRECT DAMAGES, INCLUDING, AMONG OTHERS, DAMAGES FOR LOSS OF BUSINESS PROFITS, BUSINESS INTERRUPTION, OR LOSS OF DATA, CORRUPTION OF SYSTEMS, OR LOSS OF DOCUMENTATION, WHETHER BASED ON BREACH OF CONTRACT, TORT (INCLUDING NEGLIGENCE), PRODUCT LIABILITY, OR OTHERWISE, IN CONNECTION WITH THE USE OF THE PRODUCT, EVEN IF HIKVISION HAS BEEN ADVISED OF THE POSSIBILITY OF SUCH DAMAGES OR LOSS.

- YOU ACKNOWLEDGE THAT THE NATURE OF THE INTERNET PROVIDES FOR INHERENT SECURITY RISKS, AND HIKVISION SHALL NOT TAKE ANY RESPONSIBILITIES FOR ABNORMAL OPERATION, PRIVACY LEAKAGE OR OTHER DAMAGES RESULTING FROM CYBER-ATTACK, HACKER ATTACK, VIRUS INFECTION, OR OTHER INTERNET SECURITY RISKS; HOWEVER, HIKVISION WILL PROVIDE TIMELY TECHNICAL SUPPORT IF REQUIRED.
- YOU AGREE TO USE THIS PRODUCT IN COMPLIANCE WITH ALL APPLICABLE LAWS, AND YOU ARE SOLELY RESPONSIBLE FOR ENSURING THAT YOUR USE CONFORMS TO THE APPLICABLE LAW. ESPECIALLY, YOU ARE RESPONSIBLE, FOR USING THIS PRODUCT IN A MANNER THAT DOES NOT INFRINGE ON THE RIGHTS OF THIRD PARTIES, INCLUDING WITHOUT LIMITATION, RIGHTS OF PUBLICITY, INTELLECTUAL PROPERTY RIGHTS, OR DATA PROTECTION AND OTHER PRIVACY RIGHTS. YOU SHALL NOT USE THIS PRODUCT FOR ANY PROHIBITED END-USES, INCLUDING THE DEVELOPMENT OR PRODUCTION OF WEAPONS OF MASS DESTRUCTION, THE DEVELOPMENT OR PRODUCTION OF CHEMICAL OR BIOLOGICAL WEAPONS, ANY ACTIVITIES IN THE CONTEXT RELATED TO ANY NUCLEAR EXPLOSIVE OR UNSAFE NUCLEAR FUEL-CYCLE, OR IN SUPPORT OF HUMAN RIGHTS ABUSES.
- IN THE EVENT OF ANY CONFLICTS BETWEEN THIS DOCUMENT AND THE APPLICABLE LAW, THE LATTER PREVAILS.

Data Protection

- To protect data, the development of Hikvision Products incorporates privacy by design principles. For example, for Products with facial recognition features, biometrics data is stored in your Products with encryption method; for fingerprint Products, only fingerprint template will be saved, which is impossible to reconstruct a fingerprint image.
- As a data controller/processor, you may process personal data, including collection, storage, use, processing, disclosure, deletion, etc. You are advised to pay attention to and comply with applicable laws and regulations related to the protection of personal data, including without limitation, conducting security controls to safeguard personal data, such as, implementing reasonable administrative and physical security controls, conduct periodic reviews and the assessments of the effectiveness of your security controls.

© Hangzhou Hikvision Digital Technology Co., Ltd. All rights reserved.

Symbol Conventions

The symbols that may be found in this document are defined as follows.

Symbol	Description
Danger	Indicates a hazardous situation which, if not avoided, will or could result in death or serious injury.
Caution	Indicates a potentially hazardous situation which, if not avoided, could result in equipment damage, data loss, performance degradation, or unexpected results.
Note	Provides additional information to emphasize or supplement important points of the main text.

Safety Instruction

Warning

- All the electronic operation should be strictly compliance with the electrical safety regulations, fire prevention regulations and other related regulations in your local region.
- Please use the power adapter, which is provided by normal company. The power consumption cannot be less than the required value.
- Do not connect several devices to one power adapter as adapter overload may cause over-heat or fire hazard.
- Please make sure that the power has been disconnected before you wire, install or dismantle the device.
- When the product is installed on wall or ceiling, the device shall be firmly fixed.
- If smoke, odors or noise rise from the device, turn off the power at once and unplug the power cable, and then please contact the service center.
- If the product does not work properly, please contact your dealer or the nearest service center. Never attempt to disassemble the device yourself. (We shall not assume any responsibility for problems caused by unauthorized repair or maintenance.)

Caution

- Do not drop the device or subject it to physical shock, and do not expose it to high electromagnetism radiation. Avoid the equipment installation on vibrations surface or places subject to shock (ignorance can cause equipment damage).
- Do not place the device in extremely hot (refer to the specification of the device for the detailed operating temperature), cold, dusty or damp locations, and do not expose it to high electromagnetic radiation.
- The device cover for indoor use shall be kept from rain and moisture.
- Exposing the equipment to direct sun light, low ventilation or heat source such as heater or radiator is forbidden (ignorance can cause fire danger).
- Do not aim the device at the sun or extra bright places. A blooming or smear may occur otherwise (which is not a malfunction however), and affecting the endurance of sensor at the same time.
- Please use the provided glove when open up the device cover, avoid direct contact with the device cover, because the acidic sweat of the fingers may erode the surface coating of the device cover.
- Please use a soft and dry cloth when clean inside and outside surfaces of the device cover, do not use alkaline detergents.
- Please keep all wrappers after unpack them for future use. In case of any failure occurred, you need to return the device to the factory with the original wrapper. Transportation without the original wrapper may result in damage on the device and lead to additional costs.

- Improper use or replacement of the battery may result in hazard of explosion. Replace with the same or equivalent type only. Dispose of used batteries according to the instructions provided by the battery manufacturer.
- Input voltage should meet both the SELV and the Limited Power Source according to 60950-1 standard.
- If a power adapter is provided in the device package, use the provided adapter only. If no power adapter is provided, ensure the power adapter or other power supply complies with Limited Power Source. Refer to the product label for the power supply output parameters.

Regulatory Information

EU Conformity Statement

This product and - if applicable - the supplied accessories too are marked with "CE" and comply therefore with the applicable harmonized European standards listed under the EMC Directive 2014/30/EU, RE Directive 2014/53/EU,the RoHS Directive 2011/65/EU

2012/19/EU (WEEE directive): Products marked with this symbol cannot be disposed of as unsorted municipal waste in the European Union. For proper recycling, return this product to your local supplier upon the purchase of equivalent new equipment, or dispose of it at designated collection points. For more information see: www.recyclethis.info

2006/66/EC (battery directive): This product contains a battery that cannot be disposed of as unsorted municipal waste in the European Union. See the product documentation for specific battery information. The battery is marked with this symbol, which may include lettering to indicate cadmium (Cd), lead (Pb), or mercury (Hg). For proper recycling, return the battery to your supplier or to a designated collection point. For more information see:www.recyclethis.info

Industry Canada ICES-003 Compliance

This device meets the CAN ICES-3 (B)/NMB-3(B) standards requirements.
This device complies with Industry Canada licence-exempt RSS standard(s). Operation is subject to the following two conditions:

1. this device may not cause interference, and
2. this device must accept any interference, including interference that may cause undesired operation of the device.

Le présent appareil est conforme aux CNR d'Industrie Canada applicables aux appareils radioexempts de licence. L'exploitation est autorisée aux deux conditions suivantes :

1. l'appareil ne doit pas produire de brouillage, et
2. l'utilisateur de l'appareil doit accepter tout brouillage radioélectrique subi, même si le brouillage est susceptible d'en compromettre le fonctionnement.

Under Industry Canada regulations, this radio transmitter may only operate using an antenna of a type and maximum (or lesser) gain approved for the transmitter by Industry Canada. To reduce potential radio interference to other users, the antenna type and its gain should be so chosen that the equivalent isotropically radiated power (e.i.r.p.) is not more than that necessary for successful communication.

Conformément à la réglementation d'Industrie Canada, le présent émetteur radio peut fonctionner avec une antenne d'un type et d'un gain maximal (ou inférieur) approuvé pour l'émetteur par Industrie Canada. Dans le but de réduire les risques de brouillage radioélectrique à l'intention des autres utilisateurs, il faut choisir le type d'antenne et son gain de sorte que la puissance isotrope rayonnée équivalente (p.i.r.e.) ne dépasse pas l'intensité nécessaire à l'établissement d'une communication satisfaisante.
This equipment should be installed and operated with a minimum distance 20cm between the radiator and your body.
Cet équipement doit être installé et utilisé à une distance minimale de 20 cm entre le radiateur et votre corps.

About this Manual

Get the manual and related software from or the official website (http://www.hikvision.com).

Product	Model
Four-Wire Door Station	DS-KB2412T-IM(B)
Four-Wire Indoor Station	DS-KH2230T(B)
Four-Wire Bundle	DS-KIS212(B)

Contents

Chapter 1 Wiring Description of the Bundle 1

Chapter 2 Introduction of Indoor Station 5

2.1 Appearance 5

2.2 Wall Mounting 5

2.3 Introduction of Buttons 7

2.4 Parameter Configuration 8

Chapter 3 Introduction of Door Station 10

3.1 Appearance 10

3.2 Wiring of Lock 11

3.3 Installation 12

3.3.1 Accessory Introduction 12

3.3.2 Wall Mounting with Protective Shield 13

3.3.3 Wall Mounting 15

Chapter 4 Local Operation 17

Appendix A. Cables 18

Chapter 1 Wiring Description of the Bundle

The system supports 3 typical applications. The pictures are shown as below.

Caution

Make sure all the related equipment is power-off during the wiring and installation.

Note

- Up to 2 door stations and 3 indoor stations can be used in one video intercom system.
- Only 1 indoor station can be set as the main indoor station. If there are more than 1 indoor station in the system, the other 1 or 2 indoor stations will be set as extensions.
- The door station and indoor station connect via the four-wire interface. Interface A and C are for channel 2 and B and D for channel 1.

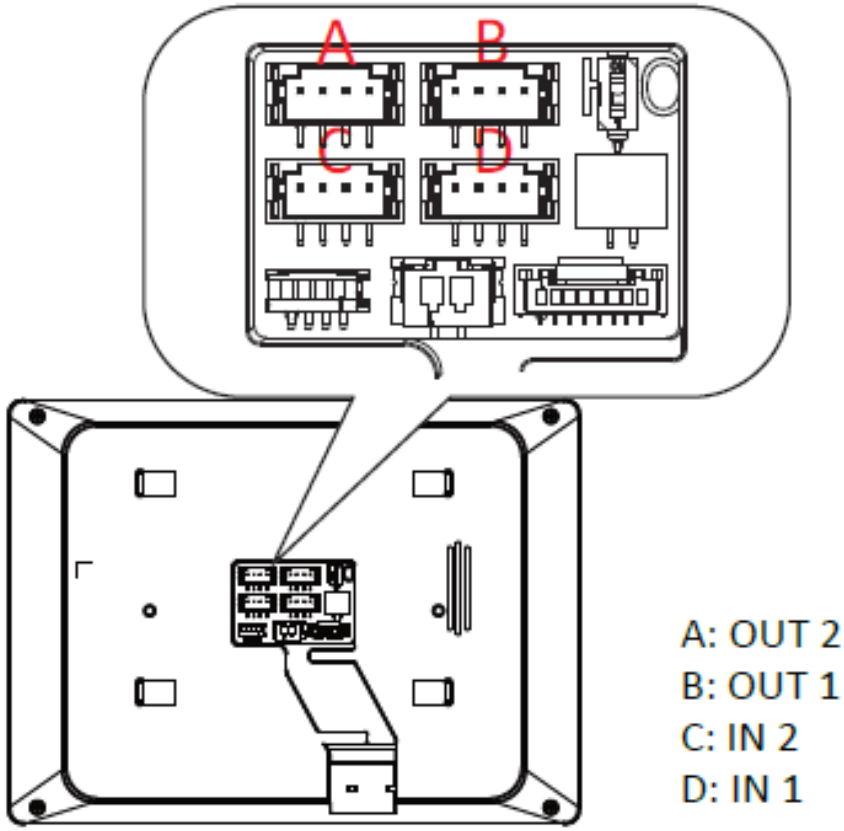

Figure 1-1 Four-Wire Interface of Indoor Station

Typical Application 1: 1 Door Station and 1 Indoor Station

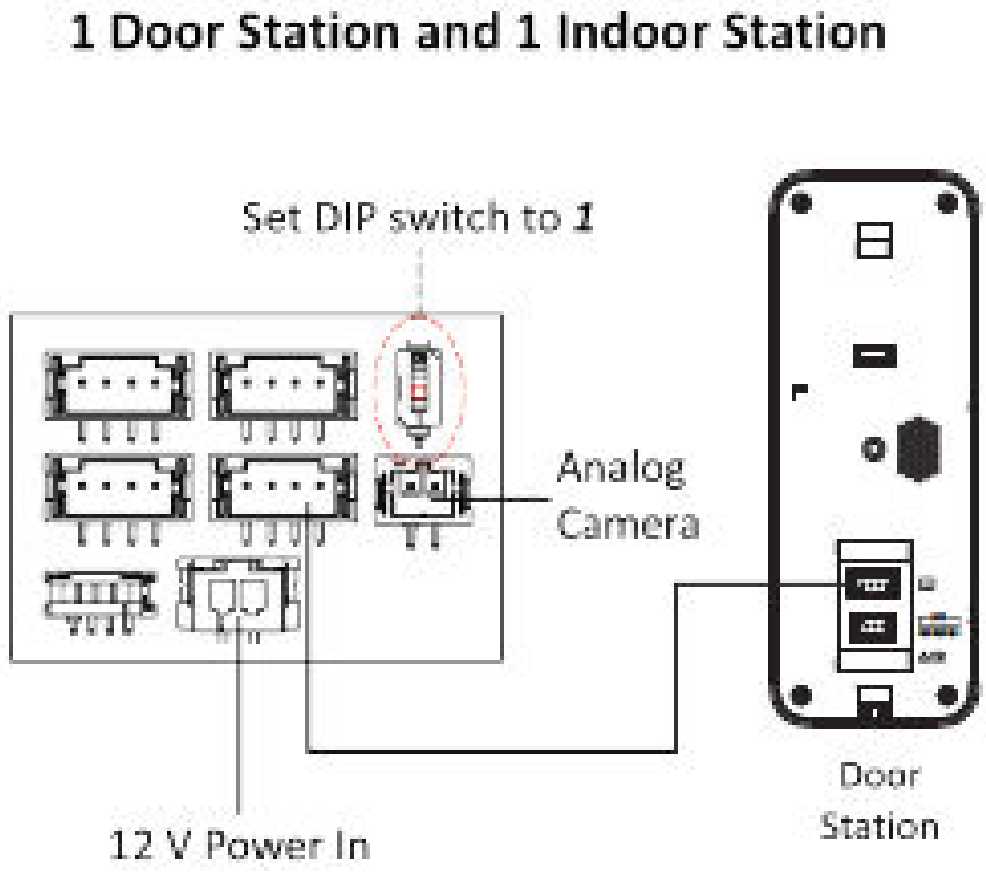

Figure 1-2 Typical Application 1

Typical Application 2: 1 Door Station and 3 Indoor Station

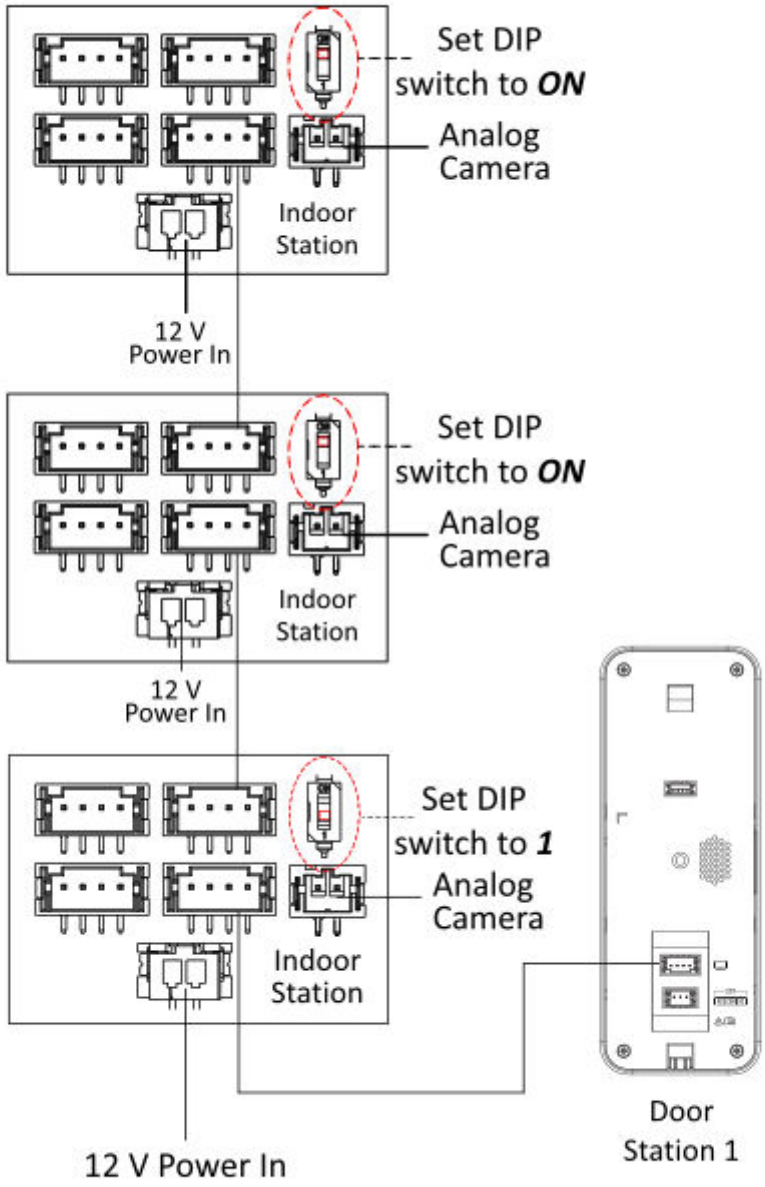

Figure 1-3 Typical Application 2

Typical Application 3: 2 Door Stations and 3 Indoor Stations

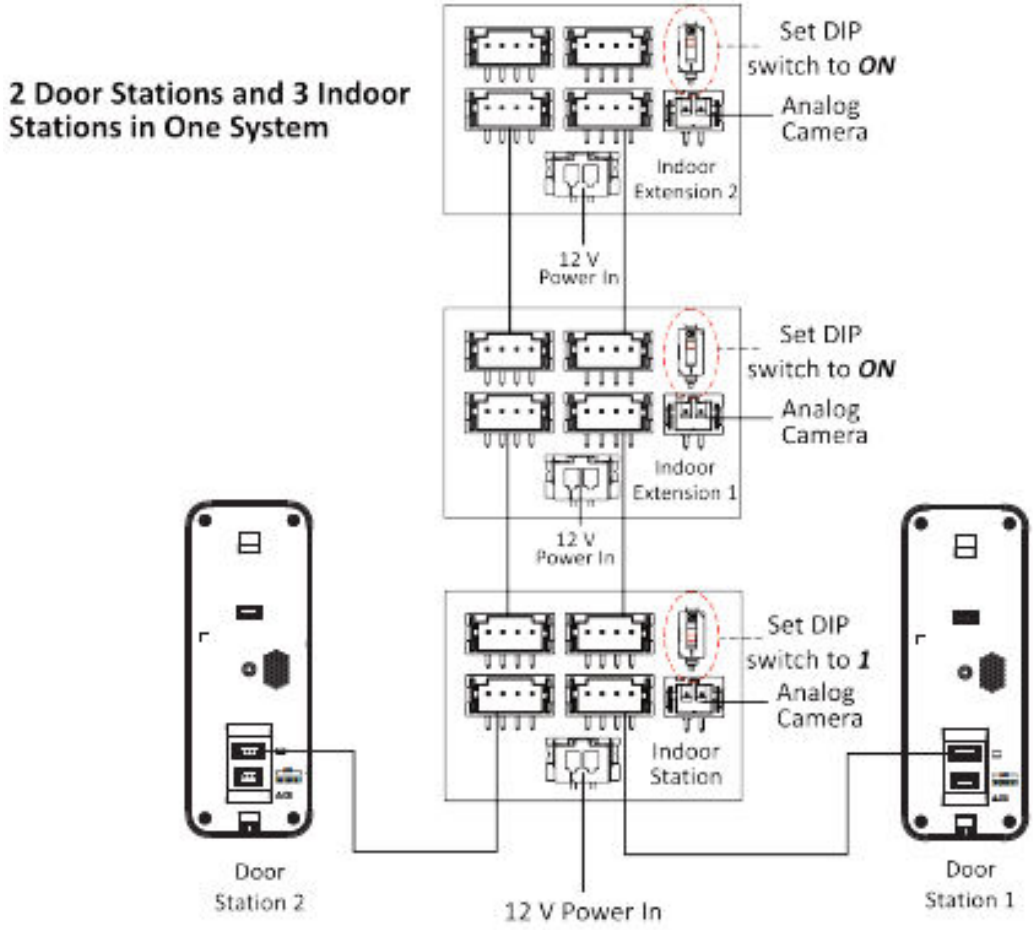

Figure 1-4 Typical Application 3

Chapter 2 Introduction of Indoor Station

2.1 Appearance

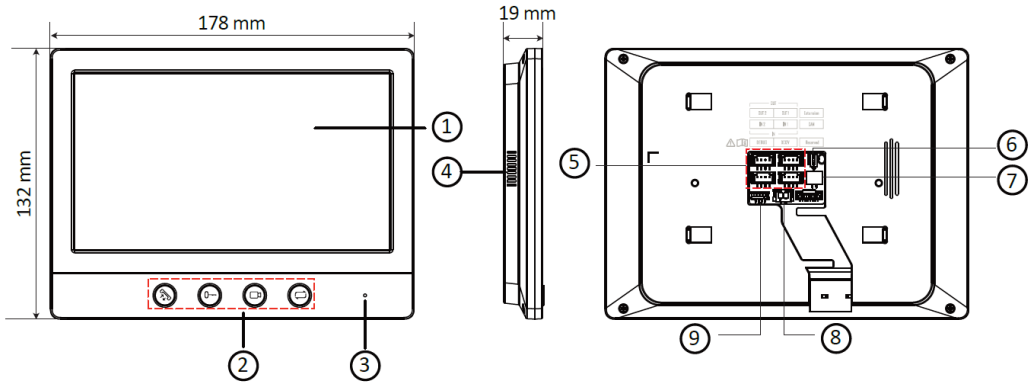

Figure 2-1 Appearance

Table 2-1 Description

No.	Description
1	Display Screen
2	Buttons (Call/Unlock/Live View/Switch Camera)
3	Microphone
4	Loudspeaker
5	Four-Wire Interface
6	DIP Switch
7	Camera Interface
8	Power Interface
9	Debugging Port (for debugging use only)

2.2 Wall Mounting

The device supports wall mounting.

Before You Start

- Make sure the device in the package is in good condition and all the assembly parts are included.
- Please make sure your power supply matches your indoor station.
- Make sure all related equipments are power-off during the installation.
- Check the product specification for the installation environment.

The dimension of mounting plate is shown as below.

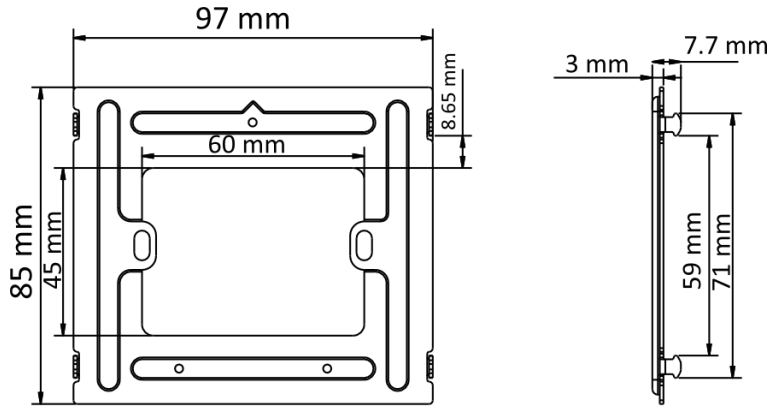

Figure 2-2 Mounting Plate

Steps

1. Chisel a hole in the wall. Insert the junction box to the hole.
2. Fix the wall mounting plate to the junction box with 2 SC-KM4X25 screws.
3. Hook the indoor station to the wall mounting plate tightly by inserting the plate hooks into slots on the rear panel of the indoor station, during which the lock catch will be locked automatically.

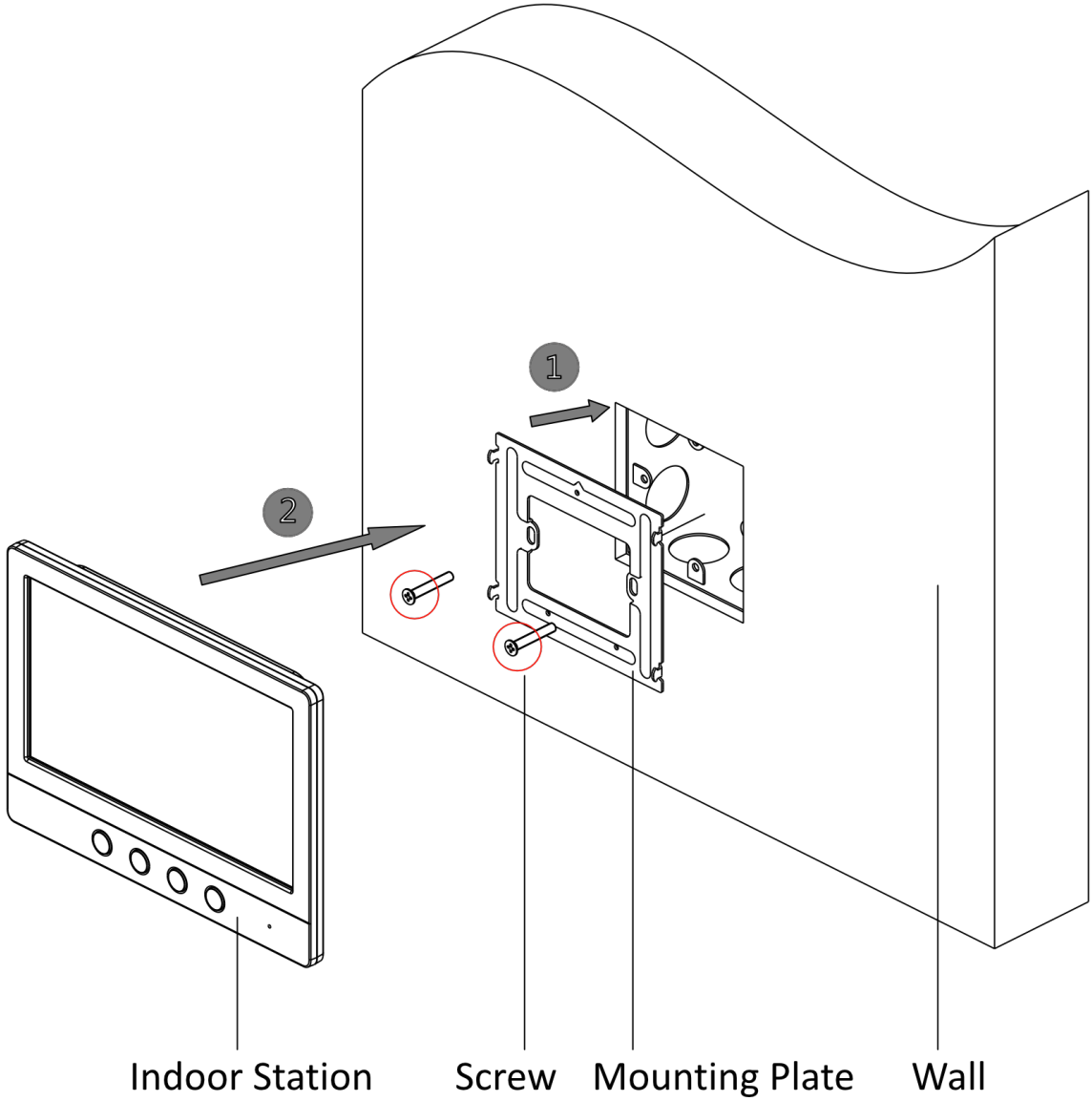

Figure 2-3 Wall Mounting

2.3 Introduction of Buttons

The introduction of buttons are as follows.

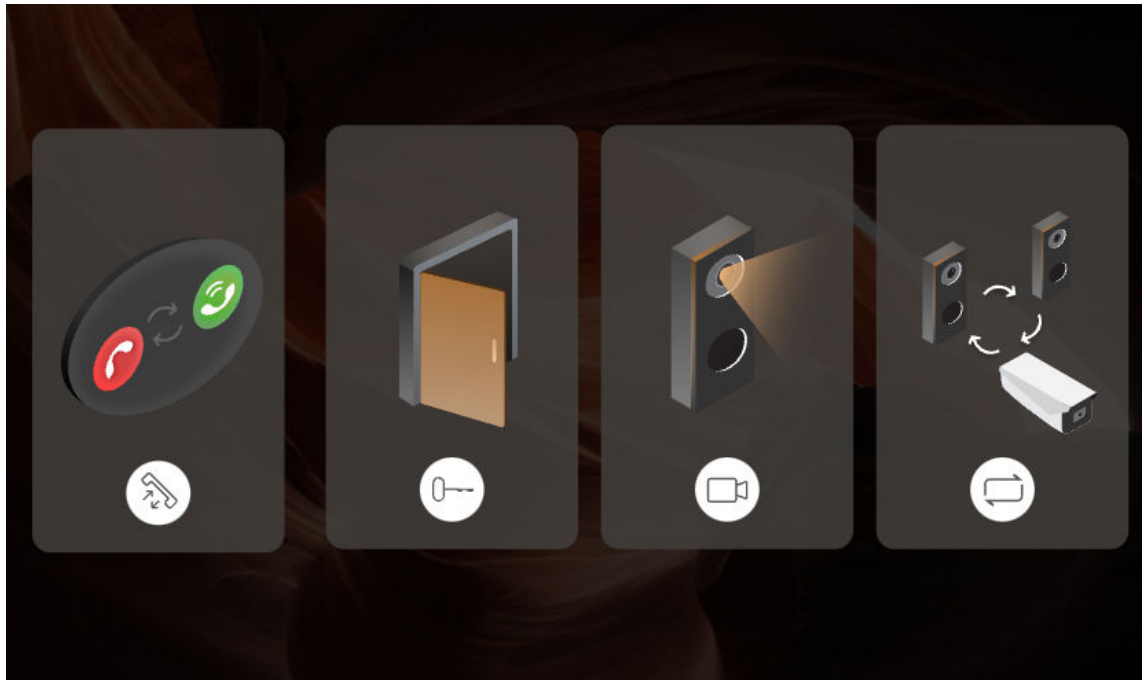

Figure 2-4 Buttons

Call Button

You can press to receive or hang up the call.

Unlock Button

You can press to unlock the door.

Live View Button

You can press to view the live videos of door stations or analog camera.

Switch Camera Button

You can press to switch between door station 1 or 2 or analog camera when viewing live videos.

Long press for 3 s to enter the page of configuration.

2.4 Parameter Configuration

You can set parameters of indoor station and door station via the indoor station.

Long press the button for 3 s to enter the page of configuration.

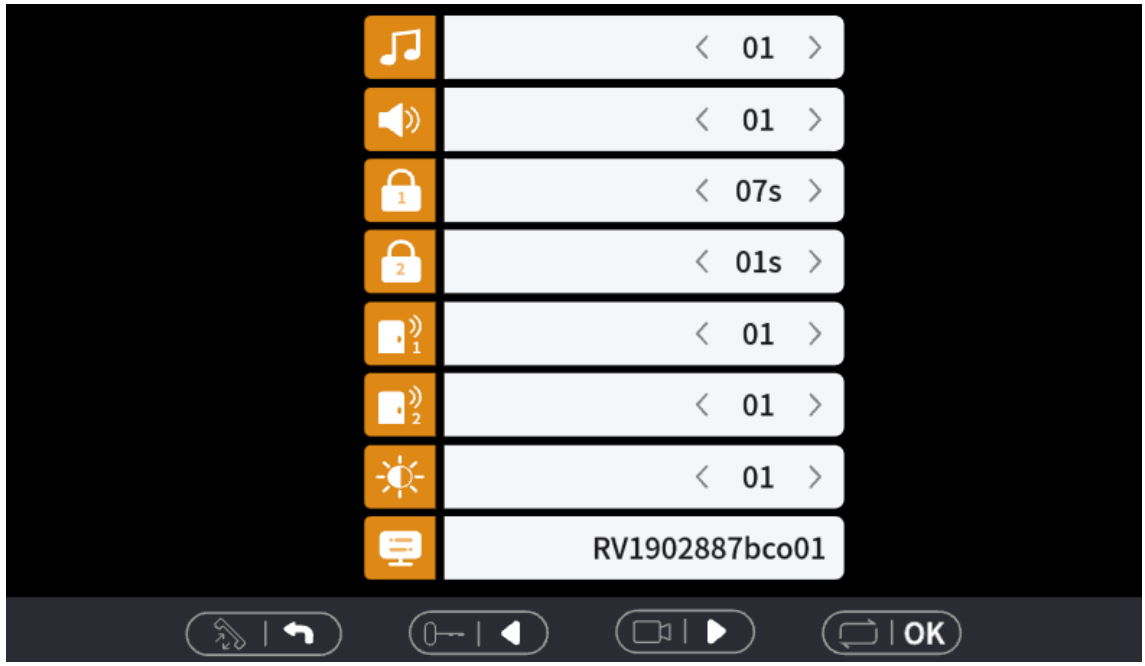

Figure 2-5 Local Configuration

You can select ringtone, adjust volume, set duration of remaining open, set volume of door stations, adjust the brightness and check the information of the device.

Select the ringtone of the device.

Adjust the volume of the device.

/

Adjust the open duration of door station 1 and door station 2.

/

Adjust the volume of door station 1 and door station 2.

Adjust the brightness of the device.

Check the information of the device.

Chapter 3 Introduction of Door Station

3.1 Appearance

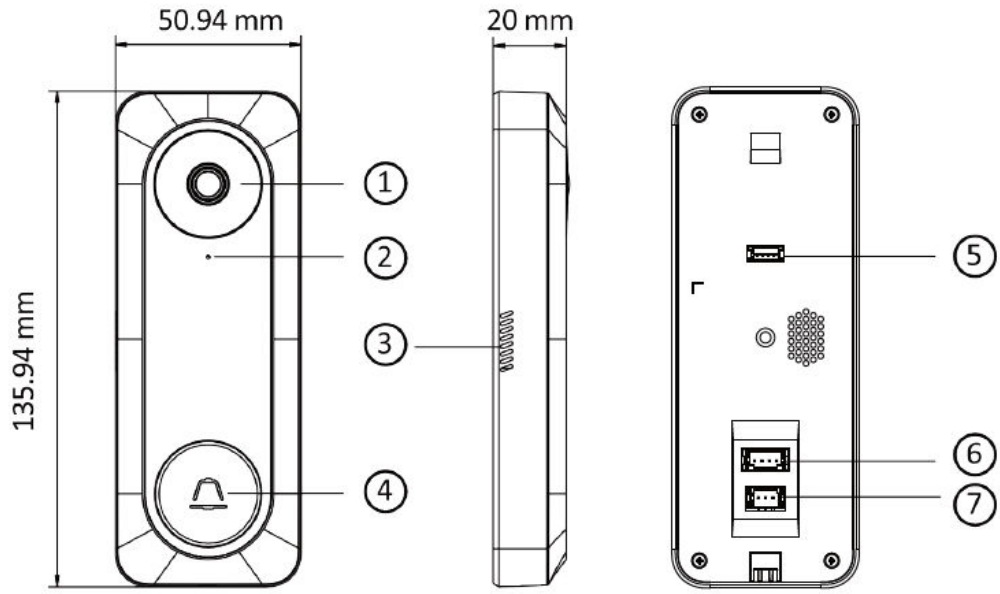

Figure 3-1 Appearance

Table 3-1 Description

No.	Description
1	Camera
2	Microphone
3	Loudspeaker
4	Call Button
5	Debugging Port (for debugging use only)
6	Four-Wire Interface
7	Lock Interface

3.2 Wiring of Lock

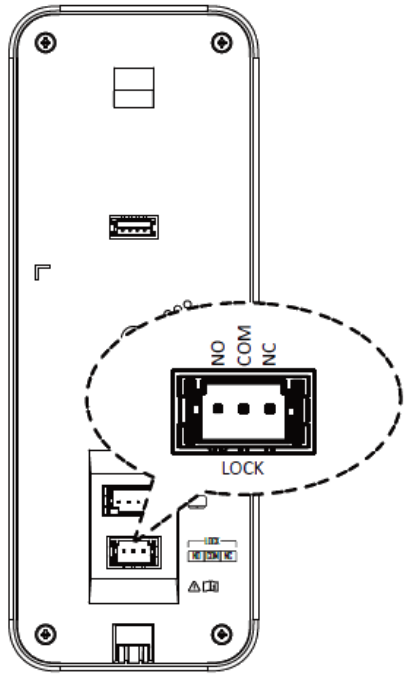

Figure 3-2 Lock Interface

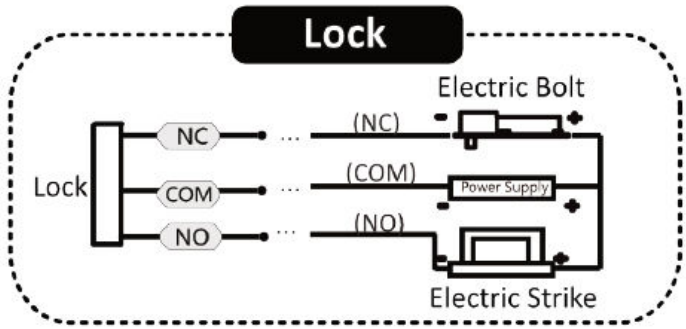

Figure 3-3 Lock Wiring

3.3 Installation

Note

- Make sure the device in the package is in good condition and all the assembly parts are included.
- Make sure your power supply matches your door station.
- Make sure all the related equipment is power-off during the installation.
- Check the product specification for the installation environment.

3.3.1 Accessory Introduction

The dimension of mounting plate is shown below.

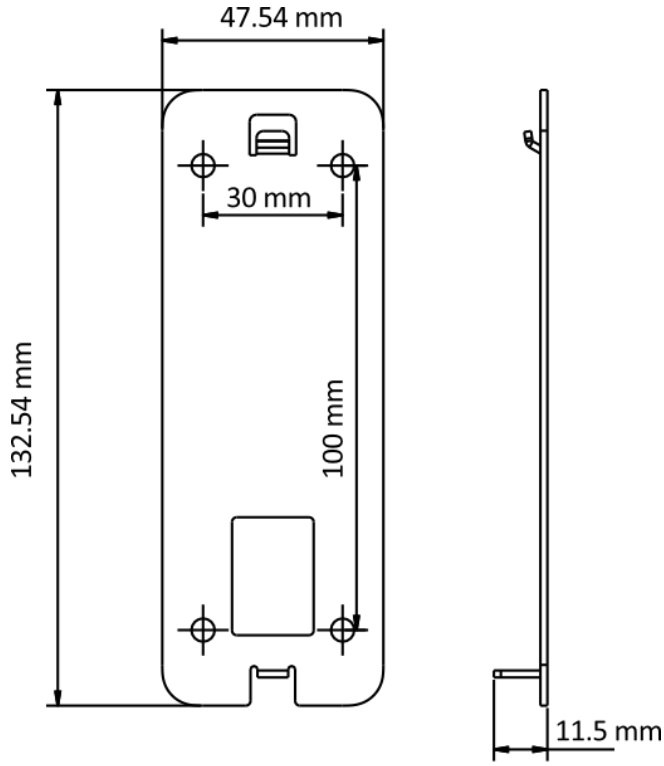

Figure 3-4 Dimension of Mounting Plate

The dimension of the mounting plate is 47.54 mm × 132.54 mm × 11.5 mm.

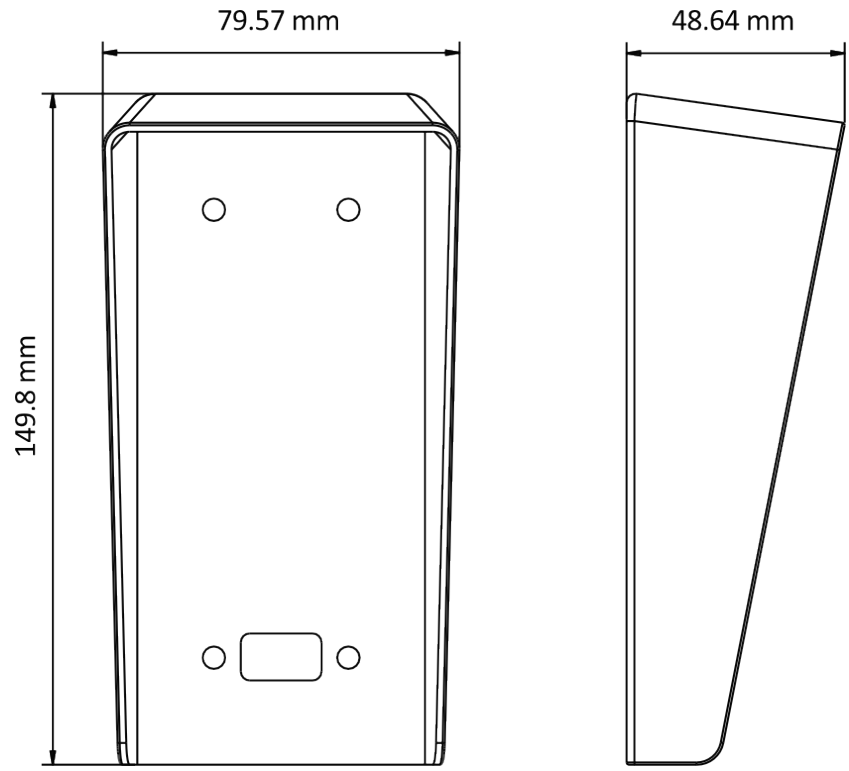

Figure 3-5 Dimension of Protective Shield

The dimension of the protective shield is 79.57 mm × 149.8 mm × 48.64 mm.

3.3.2 Wall Mounting with Protective Shield

Steps

1. Stick the mounting template on the wall. Drill screw holes according to the mounting template. Remove the template from the wall.
2. Secure the mounting plate, the silicone and the protective shield on the wall with 4 SC-KA4X25 screws according to the screw holes.

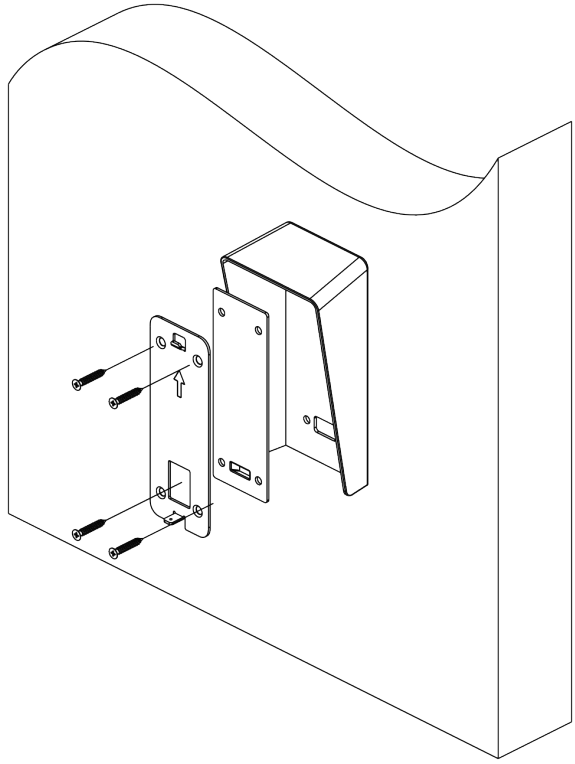

Figure 3-6 Secure Accessories to the Wall

3. Wire the device and fix the device to the mounting plate.

4. Fix the device on the mounting plate with 1 SC-KM3X8-T10-SUS-NL set screw.

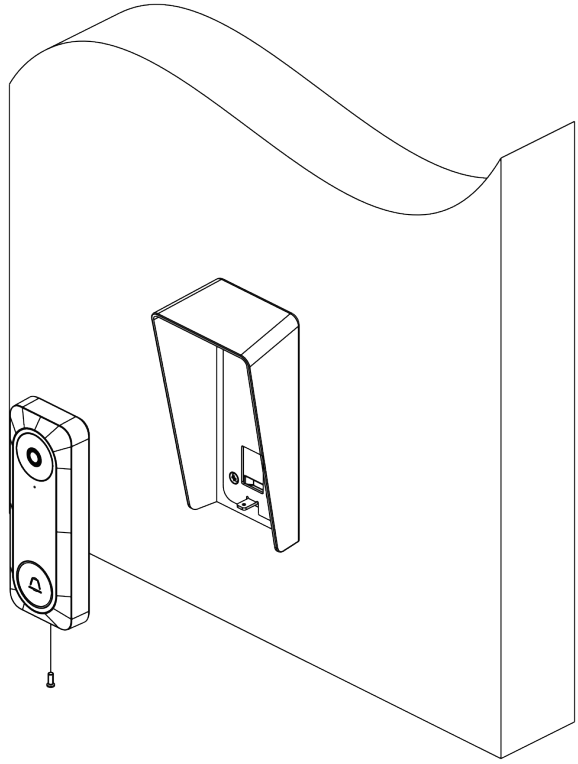

Figure 3-7 Secure Device to the Wall

3.3.3 Wall Mounting

Steps

1. Stick the mounting template on the wall. Drill screw holes according to the mounting template. Remove the template from the wall.
2. Secure the mounting plate on the wall with 4 SC-KA4X25 screws according to the screw holes.
3. Wire the device and fix the device to the mounting plate.
4. Fix the device on the mounting plate with 1 SC-KM3X8-T10-SUS-NL set screw.

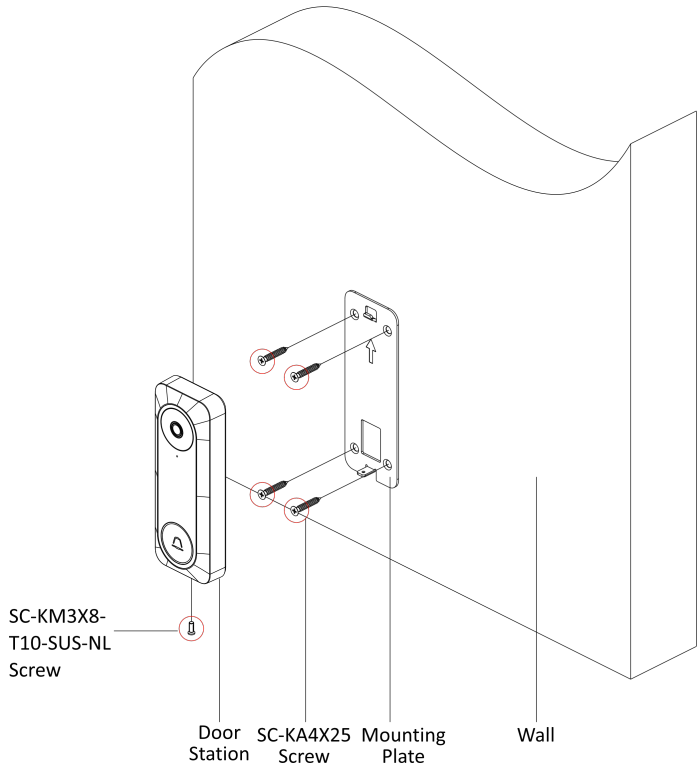

Figure 3-8 Wall Mounting

Chapter 4 Local Operation

Before you start, you need to connect the indoor station and door station via the four-wire interface and then wire the indoor station with DC 12 V power adapter via the power interface. The indoor station and door station will be powered on.

Buttons on Indoor Station

You can receive or hang up calls, unlock doors, view live views of linked devices and switching channels when viewing live videos via buttons on indoor station. For more details, please refer to ***Introduction of Buttons*** .

Call Indoor Station from Door Station

Press the call button on the door station to call indoor station. The indoor station can receive the call by pressing the call button on the indoor station or hang up the call by long pressing the call button.

Note

- The door station can cancel the call by pressing the call button only after placing the call for 5 seconds.
- After receiving the call, the indoor station can press the call button to hang up the call.

Appendix A. Cables

Cables and Wiring

If you use two groups of parallel cables or twisted pairs instead of the supplied white four-wire cables for wiring, you should put the blue cable (video) and black cable (ground) in the same group of parallel cables or twisted pairs and put the yellow cable (audio) and red cable (power) in the same group. The distance between indoor stations should be more than 5 m.

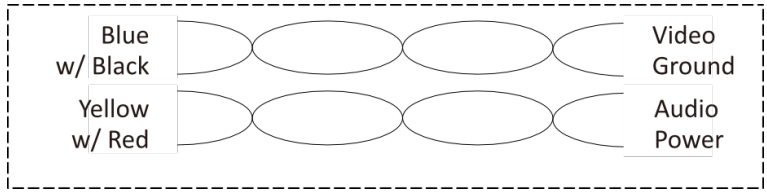

Figure A-1 Cables

Cables Specification

All the cables used need to follow the restriction in the following table.

Table A-1 Wiring Cable Specification

Routing Path	Cable Specification			
Door Station-Indoor Station	AWG 24	AWG 20	AWG 18	AWG 16
	Transmission Distance ≤ 10 m	10 m < Transmission Distance ≤ 30 m	30 m < Transmission Distance ≤ 50 m	50 m < Transmission Distance ≤ 100 m

See Far, Go Further

UD43787B